Origin: Customer :

PTS ÉLECTRIQUE Ltée
ISO 9001
20201 Clark Graham, Baie-D'Urfé, QC H9X 3T5
Tél: (514) 457-8886 / 1-800-363-8420 Fax: 514-457-6787
PTSELECTRIQUE.COM

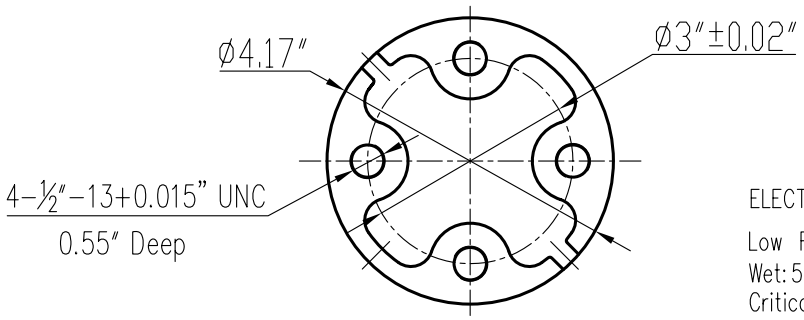

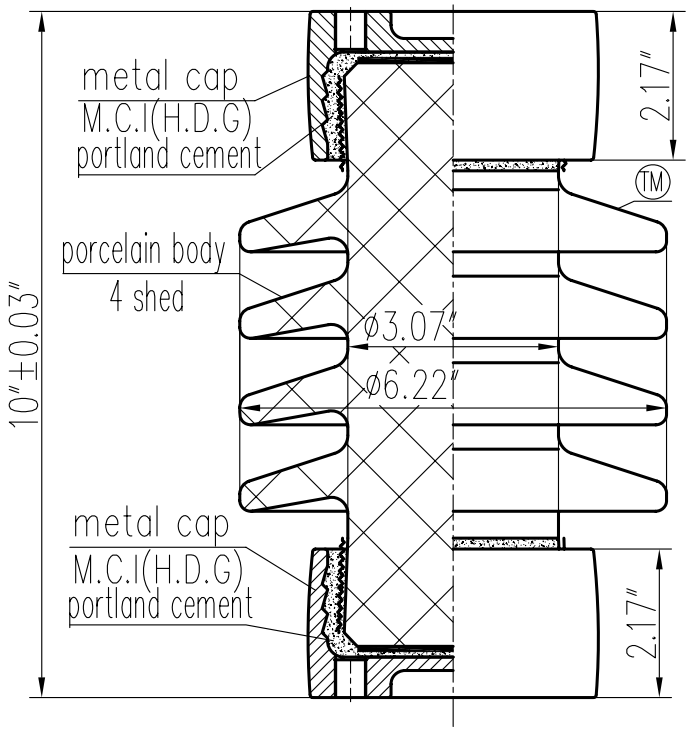

ELECTRICAL PROPERTIES

Low Frequency Flashover Voltage
Wet: 55kV; Dry: 85kV
Critical Impulse Flashover Voltage
Pos.: 125kV; Neg.: 200kV
Low Frequency Withstand Voltage
Wet: 45kV; Dry: 50kV
Impulse Withstand Voltage: 110kV
Radio Influence Voltage Data:
Test Voltage to Ground: 10kV;
Maximum RIV at 1000kHz: 50μV

PHYSICAL PROPERTIES

Creepage Distance: 394mm(15.5″)
Net weight: 7Kg(15.42 lbs)
Dry Arcing Distance: 168mm(6.6″)

MECHANICAL PROPERTIES

Cantilever Strength Upright/Underhung: 8.9kN(2000lbs)
Tension Strength: 38kN(8500lbs)
Torsion Strength: 791N·m(7000in-lbs)
Compression Strength: 44.5kN(10000lbs)

According to Standard Specification:
ANSI C 29.9 execpt drawing

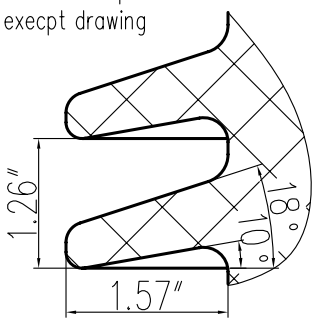

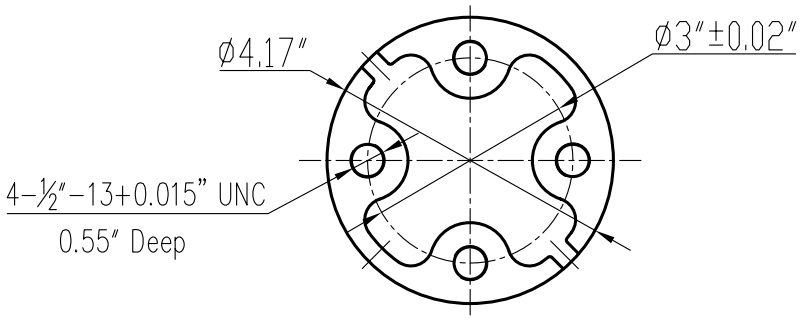

SUZHOU PORCELAIN INSULATOR WORKS

Scale	1:1.5	SOLID CORE STATION POST INSULATOR	Designation	
Design	W.C.M		Cat.No.	TR205
Check	L.H.X		Drawing No.	344300E1
Approve	Z.Y.X		Issue	1
Date	1999.01.29			

		Approve
		Design
		modify
		Issue
		Approve
		Design
		modify
A		Issue