Origin: Customer :

PTS ÉLECTRIQUE Ltée
ISO 9001
20201 Clark Graham, Baie-D'Urfé, QC H9X 3T5
Tél: (514) 457-8886 / 1-800-363-8420 Fax: 514-457-6787
PTSELECTRIQUE.COM

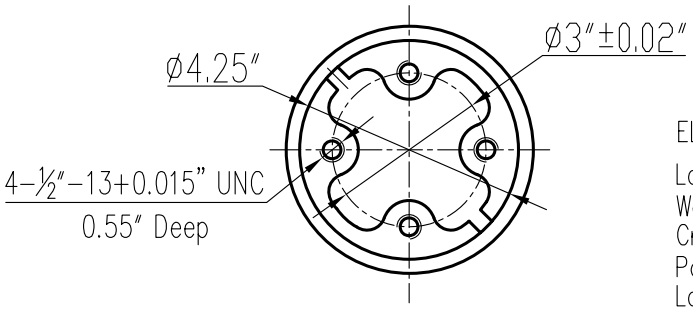

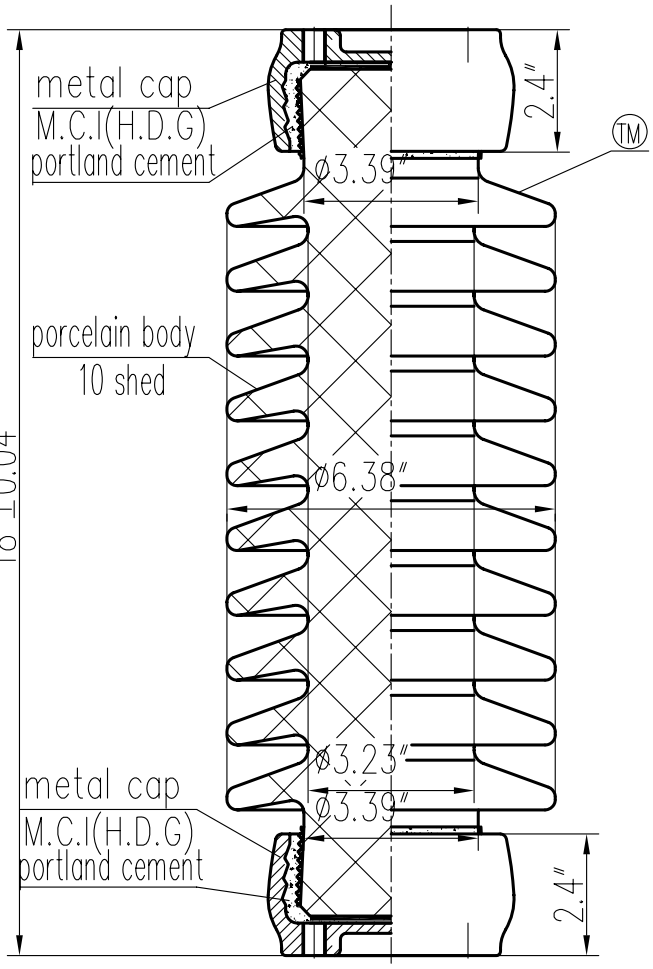

ELECTRICAL PROPERTIES

Low Frequency Flashover Voltage
Wet: 100kV; Dry: 145kV
Critical Impulse Flashover Voltage
Pos.: 225kV; Neg.: 290kV
Low Frequency Withstand Voltage
Wet: 80kV; Dry: 95kV
Impulse Withstand Voltage: 200kV
Radio Influence Voltage Data:
Test Voltage to Ground: 22kV;
Maximum RIV at 1000kHz: 100μV

PHYSICAL PROPERTIES

Creepage Distance: 940mm(37″)
Net weight: 15.6Kg(34.39lbs)
Dry Arcing Distance: 358mm(14.1")

MECHANICAL PROPERTIES

Cantilever Strength Upright/Underhung: 8.9kN(2000lbs.)
Tension Strength: 53kN(12000lbs.)
Torsion Strength: 1130N·m(10000in-lbs.)
Compression Strength: 66.7kN(15000lbs.)

According to Standard Specification:
ANSI C 29.9 execpt drawing

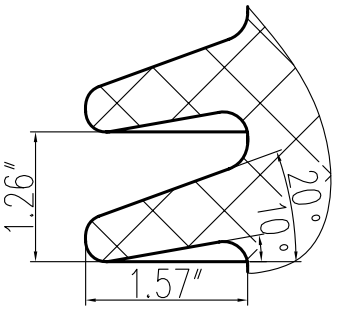

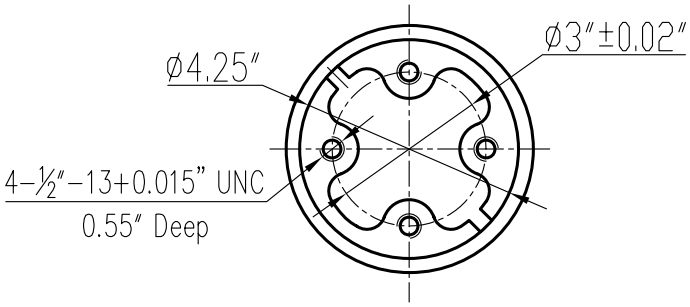

SUZHOU PORCELAIN INSULATOR WORKS

Scale	1:2	SOLID CORE STATION POST INSULATOR	Designation	
Design	W.C.M		Cat.No.	TR210
Check	L.H.X		Drawing No.	347310E2
Approve	Z.Y.X		Issue	1
Date	2007.06.09			

Issue		Design	Approve	modify
A				