Origin: Customer:

PTS ÉLECTRIQUE Ltée
ISO 9001
20201 Clark Graham, Baie-D'Urfé, QC H9X 3T5
Tél: (514) 457-8886 / 1-800-363-8420 Fax: 514-457-6787
PTSELECTRIQUE.COM

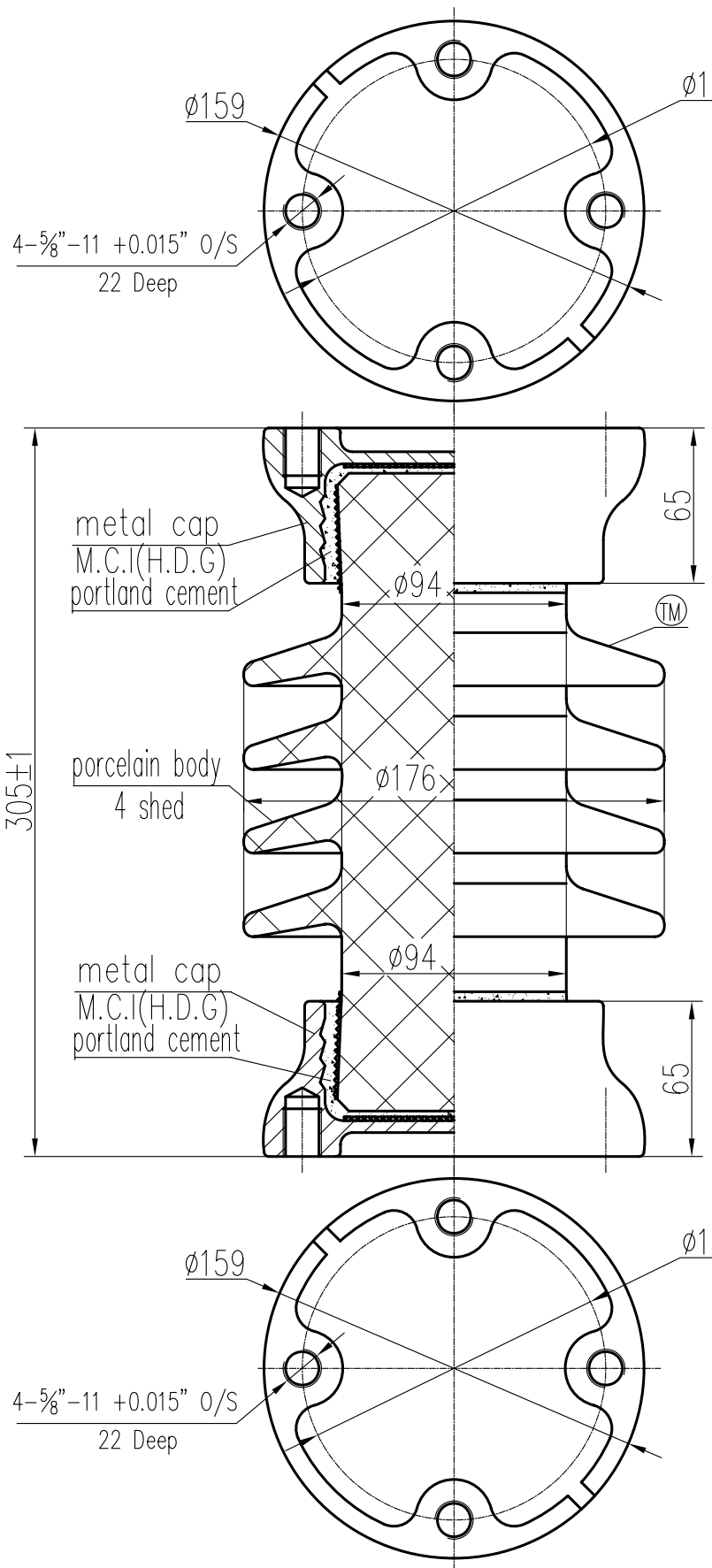


ELECTRICAL PROPERTIES

Low Frequency Flashover Voltage
Wet: 55kV; Dry: 85kV
Critical Impulse Flashover Voltage
Pos.: 125kV; Neg.: 200kV
Low Frequency Withstand Voltage
Wet: 45kV; Dry: 50kV
Impulse Withstand Voltage: 110kV
Radio Influence Voltage Data:
Test Voltage to Ground: 10kV;
Maximum RIV at 1000kHz: 50μV

PHYSICAL PROPERTIES

Creepage Distance: 394mm
Net weight: 11.2Kg

MECHANICAL PROPERTIES

Cantilever Strength Upright/Underhung: 17.8kN
Tension Strength: 89kN
Torsion Strength: 1580N·m
Compression Strength: 89kN

According to Standard Specification:
ANSI C 29.9 execpt drawing

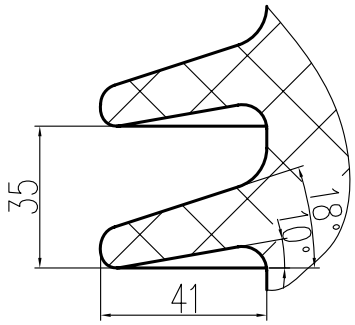


SUZHOU PORCELAIN INSULATOR WORKS

| | | | | |
|---|---|---|---|---|
| Scale | 1:1.5 | SOLID CORE STATION POST INSULATOR | Designation | |
| Design | W.C.M | | Cat.No. | TR225 |
| Check | L.H.X | | Drawing No. | 344410E1 |
| Approve | Z.Y.X | | Issue | 1 |
| Date | 2005.10.20 | | | |

| | | |
|---|---|---|
| | | Approve |
| | | Design |
| | | modify |
| | | Issue |
| | | Approve |
| | | Design |
| | | modify |
| A | | Issue |