Origin: Customer:

PTS ÉLECTRIQUE Ltée
ISO 9001
20201 Clark Graham, Baie-D'Urfé, QC H9X 3T5
Tél: (514) 457-8886 / 1-800-363-8420 Fax: 514-457-6787
PTSELECTRIQUE.COM

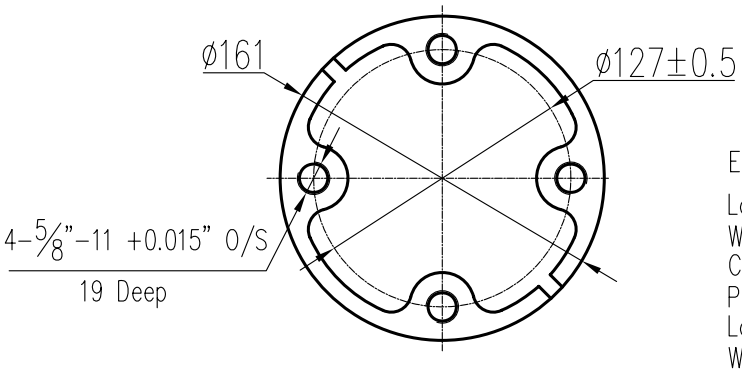

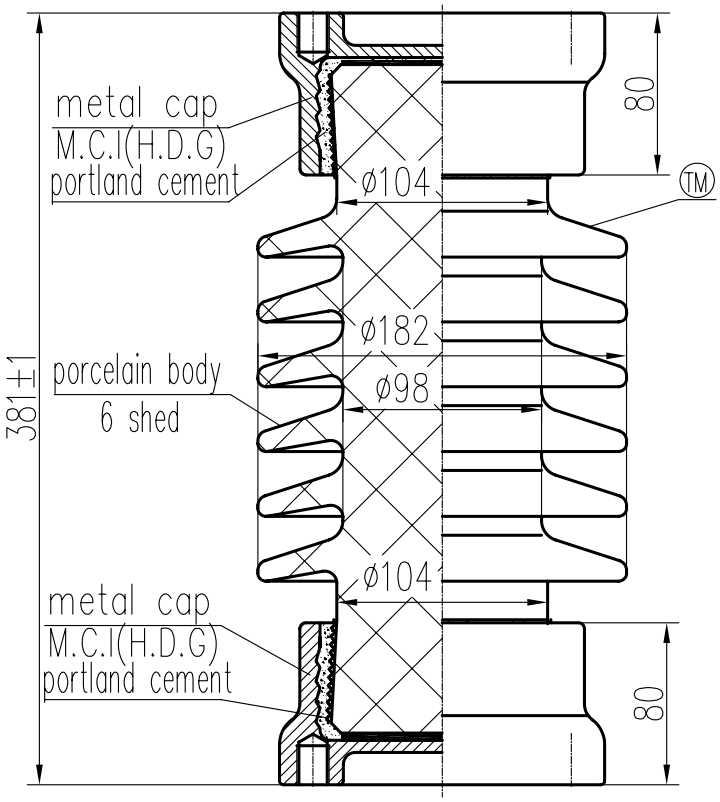

ELECTRICAL PROPERTIES

Low Frequency Flashover Voltage
Wet: 75kV; Dry: 110kV
Critical Impulse Flashover Voltage
Pos.: 170kV; Neg.: 250kV
Low Frequency Withstand Voltage
Wet: 60kV; Dry: 70kV
Impulse Withstand Voltage: 150kV
Radio Influence Voltage Data:
Test Voltage to Ground: 15kV;
Maximum RIV at 1000kHz: 100μV

PHYSICAL PROPERTIES

Creepage Distance: 610mm(24")
Net weight: 19.5Kg
Colour: Brown

MECHANICAL PROPERTIES

Cantilever Strength Upright/Underhung: 17.8kN(4000lbs.)
Tension Strength: 89kN(20000lbs.)
Torsion Strength: 1810N·m(16000in-lbs.)
Compression Strength: 89kN(20000lbs.)

According to Standard Specification:
ANSI C 29.9 execpt drawing

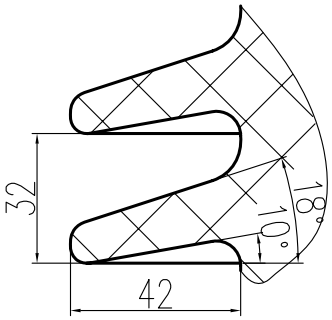

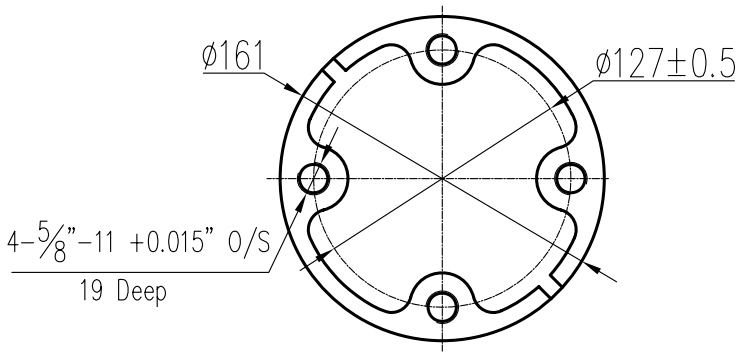

SUZHOU PORCELAIN INSULATOR WORKS

Scale	1:2	SOLID CORE STATION POST INSULATOR	Designation	
Design	W.C.M		Cat.No.	TR227
Check	L.H.X		Drawing No.	344420E1
Approve	Z.Y.X		Issue	1
Date	2009.05.05			

		Approve
		Design
		modify
		Issue
		Approve
		Design
		modify
A		Issue