Origin: Customer:

PTS ÉLECTRIQUE Ltée
ISO 9001
20201 Clark Graham, Baie-D'Urfé, QC H9X 3T5
Tél: (514) 457-8886 / 1-800-363-8420 Fax: 514-457-6787
PTSELECTRIQUE.COM

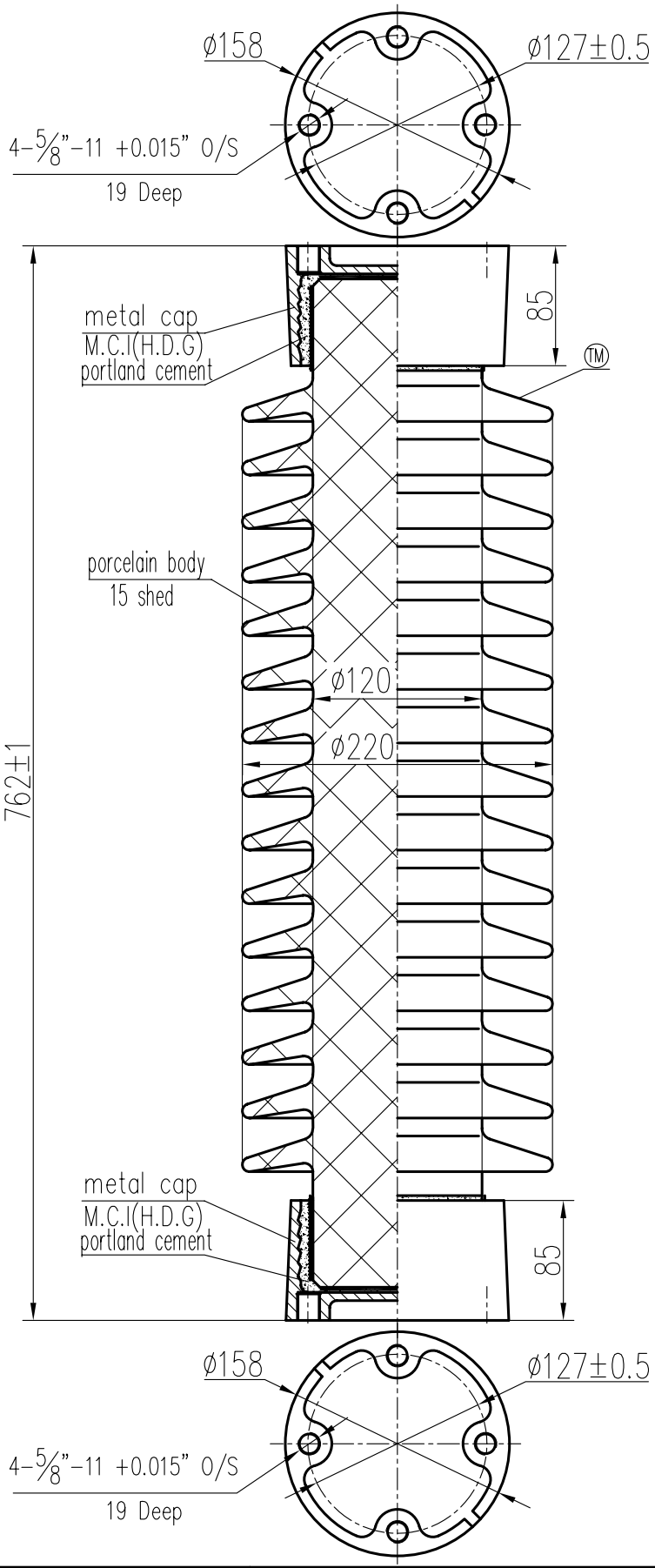

ELECTRICAL PROPERTIES

Low Frequency Flashover Voltage
Wet: 180kV; Dry: 235kV
Critical Impulse Flashover Voltage
Pos.: 390kV; Neg.: 475kV
Low Frequency Withstand Voltage
Wet: 145kV; Dry: 175kV
Impulse Withstand Voltage: 350kV
Radio Influence Voltage Data:
Test Voltage to Ground: 44kV;
Maximum RIV at 1000kHz: 200μV

PHYSICAL PROPERTIES

Creepage Distance: 1829mm
Net weight: 37.7Kg

MECHANICAL PROPERTIES

Cantilever Strength Upright/Underhung: 13.3kN
Tension Strength: 111.2kN
Torsion Strength: 4520N·m
Compression Strength: 267kN

According to Standard Specification:
ANSI C 29.9 execpt drawing

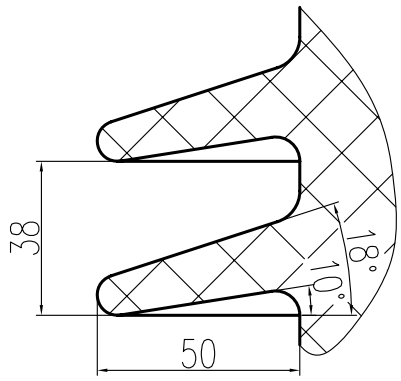

SUZHOU PORCELAIN INSULATOR WORKS

Scale	1:2.5	SOLID CORE STATION POST INSULATOR	Designation	
Design	W.C.M		Cat.No.	TR278
Check	L.H.X		Drawing No.	347880E3
Approve	Z.Y.X		Issue	1
Date	1995.05.11			

Issue		Design	Approve
		modify	
		modify	
A			