Origin: Customer:

PTS ÉLECTRIQUE Ltée
ISO 9001
20201 Clark Graham, Baie-D'Urfé, QC H9X 3T5
Tél: (514) 457-8886 / 1-800-363-8420 Fax: 514-457-6787
PTSELECTRIQUE.COM

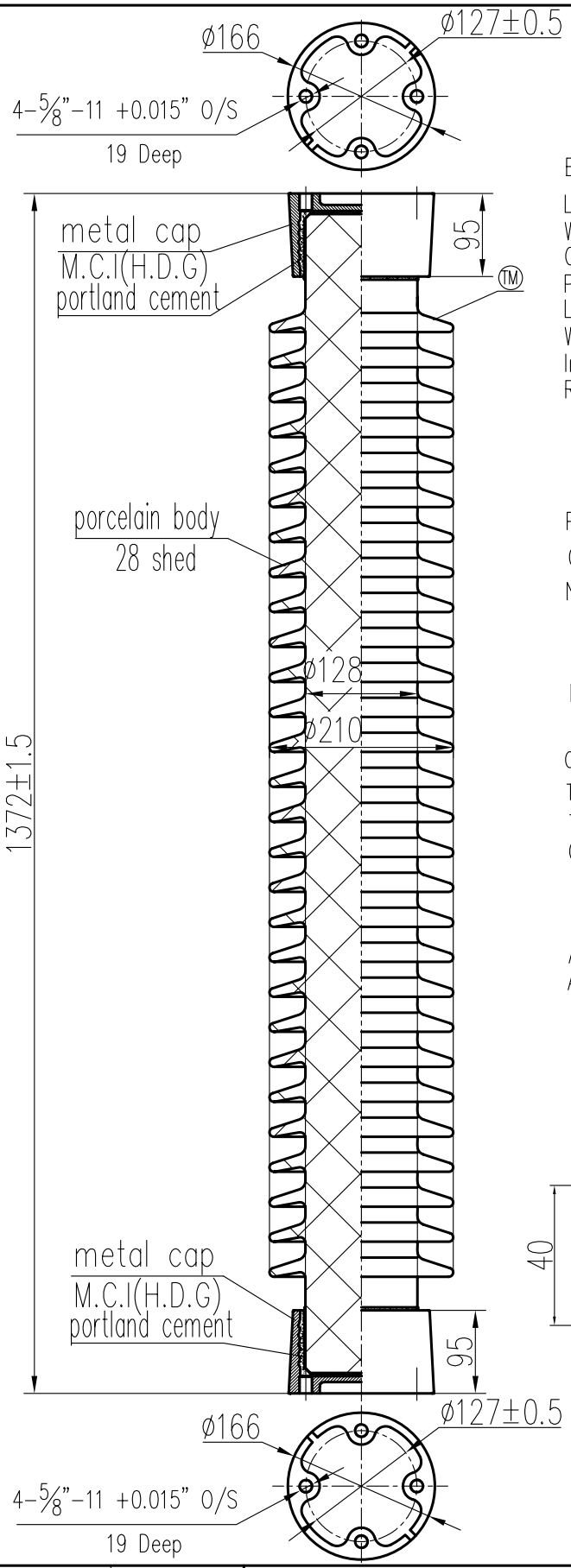

ELECTRICAL PROPERTIES

Low Frequency Flashover Voltage
Wet: 335kV; Dry: 435kV
Critical Impulse Flashover Voltage
Pos.: 710kV; Neg.: 900kV
Low Frequency Withstand Voltage
Wet: 275kV; Dry: 335kV
Impulse Withstand Voltage: 650kV
Radio Influence Voltage Data:
Test Voltage to Ground: 88kV;
Maximum RIV at 1000kHz: 200μV

PHYSICAL PROPERTIES

Creepage Distance: 2947mm(116")
Net weight: 76.8Kg

MECHANICAL PROPERTIES

Cantilever Strength Upright/Lever: 9.8kN(2200lbs.)
Torsion Strength: 10170N·m(90000in-lbs.)
Tension Strength: 111.2kN(25000lbs.)
Compression Strength: 333.6kN(75000lbs.)

According to Standard Specification:
ANSI C 29.9 execpt drawing

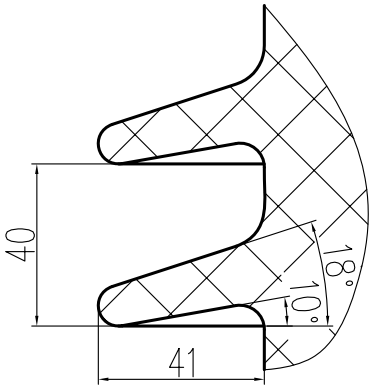

SUZHOU PORCELAIN INSULATOR WORKS

Scale	1:4	SOLID CORE STATION POST INSULATOR	Designation	
Design	W.C.M		Cat.No.	TR289
Check	L.H.X		Drawing No.	349440E5
Approve	Z.Y.X		Issue	1
Date	2005.12.30			

		Approve
		Design
		modify
		Issue
		Approve
		Design
		modify
A		Issue