Origin: Customer:

PTS ÉLECTRIQUE Ltée
ISO 9001
20201 Clark Graham, Baie-D'Urfé, QC H9X 3T5
Tél: (514) 457-8886 / 1-800-363-8420 Fax: 514-457-6787
PTSELECTRIQUE.COM

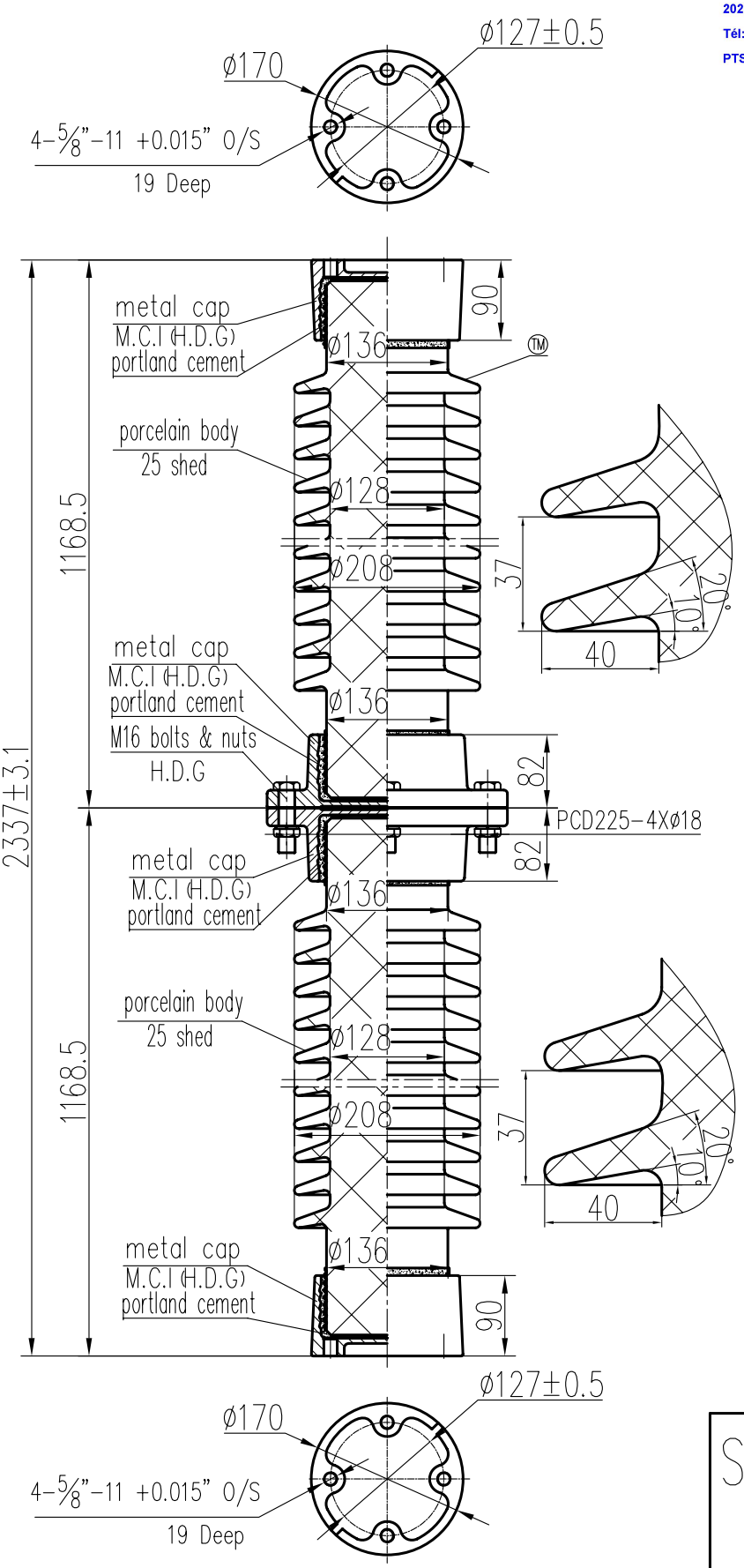

ELECTRICAL PROPERTIES

Low Frequency Flashover Voltage
Wet: 570kV; Dry: 660kV
Critical Impulse Flashover Voltage
Pos.: 1210kV; Neg.: 1450kV
Low Frequency Withstand Voltage
Wet: 455kV; Dry: 545kV
Impulse Withstand Voltage: 1050kV
Radio Influence Voltage Data:
Test Voltage to Ground: 146kV;
Maximum RIV at 1000kHz: 500μV

PHYSICAL PROPERTIES

Creepage Distance: 5030mm
Net weight: 140Kg

MECHANICAL PROPERTIES

Cantilever Strength Upright/Lever: 5.6kN
Torsion Strength: 10170N·m
Tension Strength: 112kN
Compression Strength: 334kN

According to Standard Specification:
ANSI C 29.9 execpt drawing

SUZHOU PORCELAIN INSULATOR WORKS

Scale	1:4	SOLID CORE STATION POST INSULATOR	Designation	
Design	W.C.M		Cat.No.	TR316
Check	L.H.X		Drawing No.	369900E2
Approve	Z.Y.X		Issue	1
Date	2007.04.04			

Issue		Approve	Design	modify
A				